PROPRIETARY INFORMATION
COMPANY CONFIDENTIAL

REV.	ECN. NO.	DESCRIPTION	ENG	DATE
X1		INITIAL	Sun	9/15/2014
X2		DIMENSION CHANGE	Sun	11/03/2014

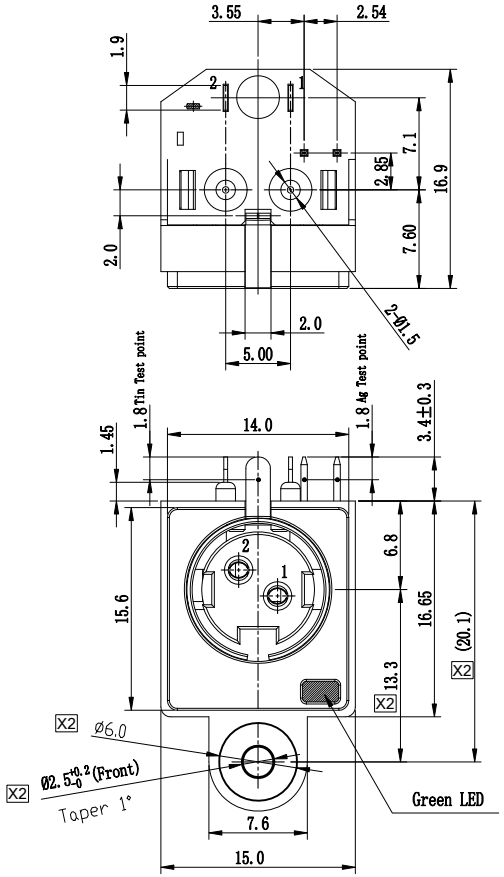

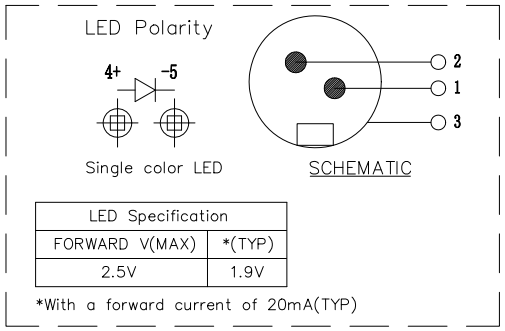

LED Specification	
FORWARD V(MAX)	*(TYP)
2.5V	1.9V

*With a forward current of 20mA(TYP)

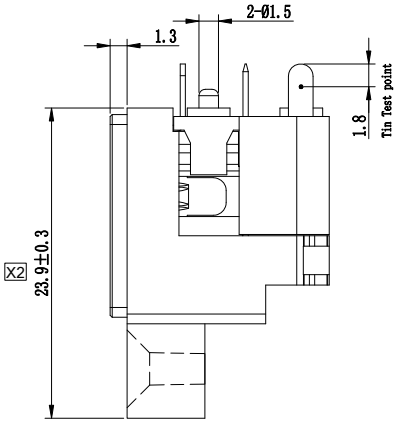

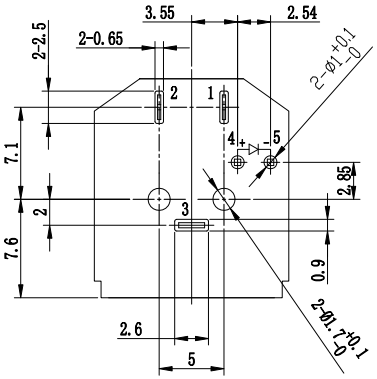

Recommended P.C.B Layout
Bottom View
P.C.B Tolerances:±0.05mm

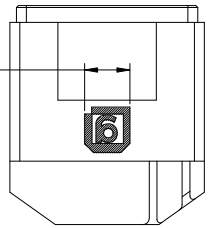

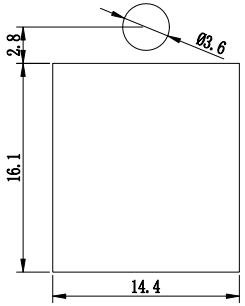

Recommended Panel Cutout
Tolerances: ±0.127mm
(Panel Thickness:0.8mm)

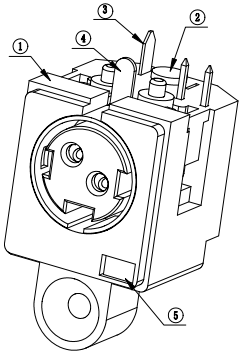

NOTES:
1.RATING: PIN 1&2:DC20V 7.5A Max.
2.CONTACT RESISTANCE:30m ohms Max.
3.INSULATION RESISTANCE:DC250V 50M ohms Min.
4.VOLTAGE WITHSTANDING:AC250V 1Minute.
5.INSERTION FORCE:4.5kgf Max.
WITHDRAWAL FORCE:1.0kgf Min.
6.OPERATING TEMP: -25°C TO +70°C
7.MOUNTING SCREW HOLE IS SIZED FOR PLASTITE NO.4 SCREW, MOUNTING TORQUE IS 40-51 N-cm.
8.SOLDER TEMPERATURE:230±5°,DURATION:5±1 SEC

DCJR-2H 02 -A K A 0 T
① ② ③④⑤⑥⑦

1. CONNECTOR:
DCJR-2H: 2PIN POWER JACK W/LED
2. POSITIONS:
02:Pins 02
3. INSULATOR MATERIAL:
A: PBT
4. INSULATOR COLOR:
K: BLACK
5. CONTACT PLATING:
A: Tin 100u" min
6. SHIELD PLATING:
0: NONE SHIEELD
7. PACKING
T: TRAY

ITEM	NAME	Q'TY	DESCRIPTION	NOTE
5	LED	1	GREEN LIGHT COLOR, Ag 10u" Plating	
4	GROUND	1	BRASS, Tin 100u" Plating, T=0.40	
3	PIN	2	PHOSPHOR BRONZE, Tin 100u" Plating, T=0.30	
2	COVER	1	PBT+15%G.F, COLOR BLACK	UL94V-0
1	BODY	1	PBT+15%G.F, COLOR BLACK	UL94V-0

GENERAL TOLERANCE	ANGLE TOLERANCE
X.± 0.50	X°±5.0°
.X± 0.40	.X°±3.0°
.XX± 0.30	.XX°±2.0°
.XXX± 0.20	.XXX°±1.0°

MATL SEE BOM
FINISH SEE NOTES
SCALE N/A UNIT mm
SHEET 1 OF 1

DRAWN Sun DATE 11/03/14'
CHECKED DATE
APPROVED River DATE 11/03/14'

GENESIS TECHNOLOGY,INC
TITLE. 2PIN POWER JACK W/LED
PART NUMBER. DCJR-2H02 -A K A 0 T
DRAWING NO. GT23-210214
SIZE A4
REV. X2